MIG, TIG & MMA INVERTER WELDER 200A

MODEL NO: **INVMIG200.V4**

Thank you for purchasing a Sealey product. Manufactured to a high standard, this product will, if used according to these instructions, and properly maintained, give you years of trouble free performance.

IMPORTANT: PLEASE READ THESE INSTRUCTIONS CAREFULLY. NOTE THE SAFE OPERATIONAL REQUIREMENTS, WARNINGS & CAUTIONS. USE THE PRODUCT CORRECTLY AND WITH CARE FOR THE PURPOSE FOR WHICH IT IS INTENDED. FAILURE TO DO SO MAY CAUSE DAMAGE AND/OR PERSONAL INJURY AND WILL INVALIDATE THE WARRANTY. KEEP THESE INSTRUCTIONS SAFE FOR FUTURE USE.

Refer to instruction manual | Wear a welding mask | Wear protective gloves | Wear safety footwear | Wear protective clothing | Electrical shock hazard | Hot surfaces | Do not use in the vicinity of a pacemaker | Welding sparks can cause explosions or fire

Arc rays can burn eyes and injure skin | Breathing welding fumes can be hazardous to your health

1. SAFETY

1.1. ELECTRICAL SAFETY

❑ **WARNING!** It is the user's responsibility to check the following:

✓ Check all electrical equipment and appliances to ensure that they are safe before using.

✓ Inspect power supply leads, plugs and all electrical connections for wear and damage.

✓ Ensure that the insulation on all cables and on the appliance is safe before connecting it to the power supply.

× **DO NOT** use worn or damaged cables, plugs or connectors.

✓ Ensure that any faulty item is repaired or is replaced immediately by a qualified electrician.

✓ If the cable or plug is damaged during use, switch off the electricity supply and remove from use.

✓ Ensure that repairs are carried out by a qualified electrician.

✓ Sealey recommend that an RCD (Residual Current Device) is used with all electrical products.

✓ **Important:** Ensure that the voltage rating on the appliance suits the power supply to be used and that the plug is fitted with the

✓ correct fuse.

× **DO NOT** pull or carry the appliance by the power cable.

× **DO NOT** pull the plug from the socket by the cable.

1.1.1. We recommend connection to a supply with a type C breaker. If in doubt you must contact a qualified electrician to ensure that a suitably rated supply is available.

❑ **WARNING!** Be very cautious if using a petrol or diesel generator. The generator must be stable with regard to frequency (Hz), voltage and wave form. The output must be higher than the power (kVA) of the inverter. The generator must also be self regulating. If any A.M. feature is not respected the working of the regulation card may be affected. Use of a generator without a regulator may be dangerous and will invalidate your inverter warranty.

1.2. GENERAL SAFETY

1.2.1. OPERATOR SAFETY

✓ Operators must receive adequate training before using the inverter.

✓ Remove ill fitting clothing, remove ties, watches, rings and other loose jewellery and contain long hair.

× **DO NOT** operate the inverter while under the influence of drugs, alcohol or intoxicating medication, or if tired.

✓ Stand correctly keeping a good footing and balance, ensure that the floor is not slippery and wear non-slip shoes.

✓ Keep unauthorised persons away from the work area. Any persons working within the area must wear the same protective items.

✓ Avoid oily greasy clothing. A spark may ignite them.

× **DO NOT** touch the work piece close to the weld as it will be very hot. Allow to cool.

× **DO NOT** touch the electrode holder immediately after use. Allow the electrode holder to cool.

✓ Wear safety welding gauntlets.

❑ **WARNING! DO NOT** place the welding power source on a tilted plane as this may lead to the unit toppling over.

✓ The output is rated at an ambient temperature of 20°C and the welding time may be reduced at higher temperatures.

✓ Risk of electric shock: Electric shock from welding electrode can kill. **DO NOT** weld in the rain or snow. Wear dry insulating gloves.

× **DO NOT** touch electrode with bare hands. **DO NOT** wear wet or damaged gloves. Protect yourself from electric shock by insulating yourself from workpiece. **DO NOT** open the equipment enclosure.

✓ Use genuine parts and accessories only. Unapproved parts may be dangerous and will invalidate the warranty.

▲ **DANGER! DO NOT** weld near flammable materials, solids, liquids, or gases, and **DO NOT** weld containers or pipes which have held flammable materials or gases, liquids or solids. Avoid operating on materials cleaned with chlorinated solvents or near such solvents.

× **DO NOT** use power source for pipe thawing.

▲ **DANGER!** Vapours from chlorinated solvents (such as de-greasers) can be decomposed by the heat of the arc to form PHOSGENE, a highly toxic gas, and other lung and eye irritating products.
The ultraviolet (radiant) energy of the arc can also decompose trichloroethane and perchloroethylene vapours to form phosgene.

× **DO NOT** weld where solvent vapours can be drawn into the welding or cutting atmosphere or where the radiant energy can penetrate to atmospheres containing even minute amounts of trichloroethylene or perchloroethylene.

✓ Prevent dangerous conditions arising by providing adequate ventilation. **NEVER** ventilate with oxygen.

▲ **DANGER!** Lead-, cadmium-, zinc-, mercury- and beryllium-, bearing materials, when welded (or cut) may produce harmful concentrations of toxic fumes. Adequate local exhaust ventilation must be used, or each person in the area as well as the operator must wear an air- supplied respirator.
For beryllium, both must be used. Metals coated with or containing materials that emit toxic fumes should not be heated unless coating is removed from the work surface, the area is well ventilated, or the operator wears an air-supplied respirator.

× **DO NOT** work in an unventilated confined space. If necessary, wear an air-supplied respirator.

❑ **WARNING!** Generator engine exhaust must be vented to the outside air. Carbon monoxide can kill.

✓ When not in use store the welder in a safe, dry, childproof area.

1.2.2. CABLE CONNECTIONS

✓ Keep the inverter and cables in good working order and condition. Take immediate action to repair or replace damaged parts.

✓ Ensure that there is no obstruction to the flow of clean, cool air and ensure that there are no conductive dusts, corrosive vapours or humidity which could enter the inverter and cause serious damage.

1.2.3. PROTECTION FROM ARC

❑ **WARNING!** Use welding head shield to protect eyes and avoid exposing skin to ultraviolet rays given off by electric arc. Looking at an arc momentarily with unprotected eyes (particularly a high intensity gas-shielded arc) can cause a retinal burn that may leave a permanent dark area in the field of vision.

✓ Before welding whilst wearing contact lenses, seek advice from your optician.

✓ Avoid unintentional contact with workpiece. Accidental or uncontrolled arcing on the electrode holder may be dangerous.

× **DO NOT** hit the electrode on the workpiece, this may damage the electrode and make strike-up difficult.

✓ Wear safety welding gauntlets.

1.2.4. WELDING ENVIRONMENT

✓ Locate the inverter in a suitable work area.

✓ Keep the work area clean and tidy and free from unrelated materials. Also ensure that the work area has adequate lighting.

× **DO NOT** get inverter wet or use in damp or wet locations or areas where there is condensation.

✓ First aid facilities and a qualified first aid person should be available during welding operations.

✓ For production welding, a separate room or enclosed bay should be provided. In open areas, surround the operation with low reflective, non-combustible screens or panels. Allow for free air circulation, particularly at floor level. Provide face shields for all persons who will be looking directly at the weld. Before starting to weld, make sure that screen or bay doors are closed.

✓ Always ensure that there is full free air circulating around the outer casing of the machine, and that the louvres are unobstructed.

1.2.5. FIRE HAZARD

❑ **WARNING!** Be aware that flying sparks or falling slag can pass through cracks, along pipes, through windows or doors, and through wall or floor openings, out of sight of the operator. Sparks and slag can fly 10m.

× **DO NOT** weld within 10 metres of combustible materials (including building construction materials).

× **DO NOT** weld adjacent to openings (concealed or visible) in floors or walls within 10m that can expose combustibles to sparks.

× **DO NOT** weld near to walls, ceilings, roofs or metal partitions where there are combustibles that can be ignited by radiant or conducted heat.

✓ Have suitable fire extinguishing equipment available and someone to use it during welding operations and for some time after welding ceases. After work is done, check that area is free of sparks, glowing embers, and flames.

1.2.6. PRODUCT CARE & MAINTENANCE

× **DO NOT** attempt to fit any unapproved electrode holder, components, or parts to the inverter unit.

✓ Keep the inverter clean for best and safest performance.

❑ **WARNING!** If the case is opened for maintenance or repair, wait 10-15 seconds after the unit is switched off for the capacitor to discharge.

1.2.7. TRANSPORTATION

The machine should be transported in an upright position.

NOTE: Always move the inverter by lifting it from its handle. Never pull it by the welding gun or cables.

1.2.8. ENVIRONMENT

The machine is suitable for both indoor and outdoor use. But it should be protected from heavy rain and sunshine. Store the machine in a dry and clean environment and protect it from sand and dust during use and storage. The recommended operating temperature range -20ºC-+40ºC.

Place the machine in such a way that it does not come in contact with hot surfaces, sparks and spatters.

Make sure the air flow in the machine is unrestricted.

1.2.9. WELDING CABLES

The welding cables should be kept as short as possible and should be positioned close together, close to the floor level.

1.2.10. EARTHING OF THE WORK PIECE

Where the work piece is not bonded to earth for electrical safety, nor connected to earth because of its size and position, e.g. ship's hull or building steel work, a connection bonding the work piece to earth may reduce emissions in some. But not all instances. Care should be taken to prevent the earthing of the work piece increasing the risk of injury to users, or damage to other electrical equipment. Where necessary, the connection of the work piece to earth should be made by direct connection to the work piece.

❑ **WARNING!** Hot metal such as electrode stubs and workpieces should never be handled without gloves.

2. INTRODUCTION

Fan cooled DC power supply for MIG and TIG, suitable to weld steel, stainless steel, copper, nickel, titanium and their alloys. Also suitable for MMA/ARC welding with a variety of rods including rutile, basic and stainless from Ø1.6mm to Ø4mm. Switch between MIG, TIG* and MMA* welding modes (*optional extra torches required). Automatic thermal overload protection. Self-explanatory pictogram for each dial and switch. Wire feed speed control. Allows change of polarity of welding torch depending on MIG or flux-cored welding. Supplied with 3m MIG torch, 3m 16mm² earth cable, both with 10-25 quick connectors., 3m gas hose and regulator. Contact Tips: 0.6, 0.8 (x2), 0.9, 1mm. 0.2kg 0.8mm flux cored wire.

3. SPECIFICATION

Model No	INVMIG200.V4
Absorbed Power	7.7kw
Applicable Standards	EN 60974-10:2014+A1:2015 EN IEC 60974-1:2018+A1:2019
Class of insulation	F
Duty Cycle Mig	100% @ 77A, 60% @ 100A, 15% @ 200A
Duty Cycle MMA	100% @ 66A, 60% @ 85A, 15% @ 170A
Duty Cycle TIG	100% @ 77A, 60% @ 100A, 15% @ 200A
Efficiency of the product:	82%
Electrode Capacity	Ø1.6-4mm
EMC classification	Class A
Gas Type	CO2, Argon, CO2/Argon Mix
IP Rating	IP21S
MIG Torch	Euro Non-Live BINZEL® MB15*
Nett Weight	15kg

Plug Type	Bare Wire
Pollution Degree	3
Power Supply Cable Length	2.2m
Static Characteristic	Drooping
Supply	230V**
Welding Current	30A-200A
Wire Capacity	5kg
MMA Accessory Kit (Optional)	MMA01
TIG Accessory Kit (Optional)	TIG10S

NOTE:
To achieve maximum power a 32A supply may be required.

4. CONTENTS

INVMIG200.V4

5. OPERATION

- ❑ **WARNING!** Ensure that the inverter is not plugged into the mains power supply before connecting or disconnecting cables. For electrical installation, see Safety Instructions (Section 1).
- ❑ **WARNING!** Failure to follow the electrical safety instructions may affect the operating performance and could damage the built-in safety system which, in turn, could result in personal injury or fatality and will invalidate the warranty.

5.1. WELDING CABLE "ELECTRODE HOLDER" CONNECTION

5.1.1. Before connecting cables it is important to refer to the electrode manufacturer's instructions on the electrode packaging which will indicate the correct polarity connection for the electrode, together with the most suitable current to use.

5.1.2. The welding cables should be kept as short as possible and should be positioned close together,running at or close to the floor level.

5.1.3. EARTHING OF THE WORK PIECE

5.1.4. Where the work piece is not bonded to earth for electrical safety, nor connected to earth because of its size and position, e.g. a ship's hull or building steel work, a connection bonding the work piece to earth may reduce emissions in some, but not all instances. Care should be taken to prevent the earthing of the work piece increasing the risk of injury to users, or damage to other electrical equipment. Where necessary, the connection of the work piece to earth should be made by direct connection to the work piece. But in some countries where direct connection is not permitted, the bonding should be achieved by suitable capacitance, selected according to national regulations.

fig.1

KEY:
1 On/Off Switch
2 Work Indicator (lights when an arc is struck).
3 Alarm Indicator
4 Power Indicator
5 Amperage Display
6 Wire Speed Control (MIG/MAG mode)
Amperage Control (TIG/Arc mode)
7 MIG Torch Euro Connector
8 Positive (+) Socket
9 Power Input Lead
10 Negative (-) Socket
11 Voltage Control
12 Spot/Timer Control
13 Mode Selector
14 MIG Trigger Mode Selector
15 Voltage Display

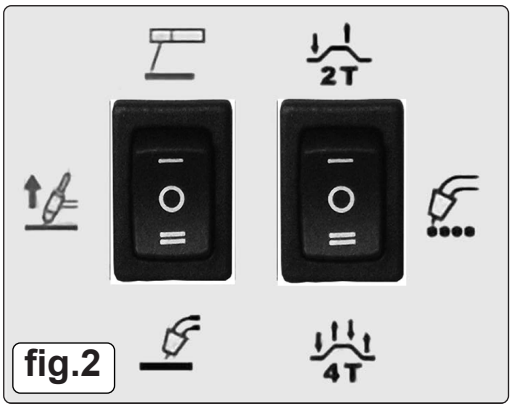

fig.2

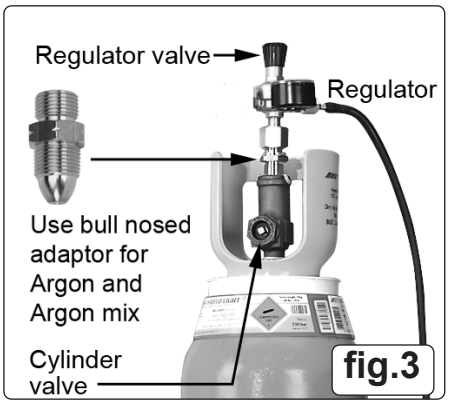

fig.3

6. MIG WELDING

6.1. GAS SUPPLY

6.1.1. **ATTACHING THE REGULATOR** (fig.3) Whichever gas you are using it is advisable to 'crack' the cylinder valve before attaching the regulator. This means opening and closing the valve very quickly in order to blow away any dust and dirt that may have accumulated in the gas outlet. Stand to one side whilst doing this.

6.1.2. **CO_2 GAS** Ensure that the threads on the gas bottle are undamaged and free of oil and grease before attaching the regulator. (Oil or grease in the presence of high pressure gases can be explosive.) Ensure that the regulator has an undamaged gasket fitted. The regulator will screw directly to the threads on the gas bottle. Tighten with a wrench.

6.1.3. **ARGON GAS OR ARGON MIXTURES** Cylinders containing argon gas and argon mixtures have a female thread and will require the use of a Bull Nose Adaptor to attach the regulator to the cylinder as indicated in fig.3. Ensure that the threads on the gas bottle are undamaged and free of oil and grease before attaching the regulator. (Oil or grease in the presence of high pressure gases can be explosive.) Fit the Bull Nose Adaptor to the cylinder first and tighten with a wrench.

6.1.4. Slide a hose clip over each end of the gas hose supplied. Push one end of the hose onto the regulator outlet and the other end over the gas inlet spigot on the back of the welder. Tighten the clips to ensure a good seal.

6.1.5. Close the regulator valve by turning it anticlockwise before opening the cylinder valve. Stand to one side when opening.

6.1.6. Set the regulator flow rate to 5-8 litres/min depending on the material to be welded, and whether there are draughts which are strong enough to disturb the gas flow.

6.2. CONNECTING THE TORCH CABLE TO THE WELDER Align the pins on the Euro connector with the socket on the welder front panel as shown in fig.4. Push the connector into the socket and rotate the locking ring (A) clockwise so that it draws the plug into the socket as shown in fig.5.

NOTE: Damage to torches and cables is not covered by warranty.

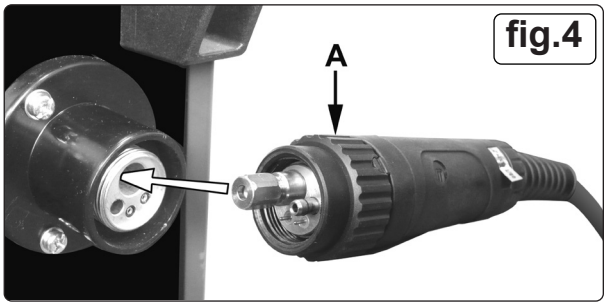

fig.4

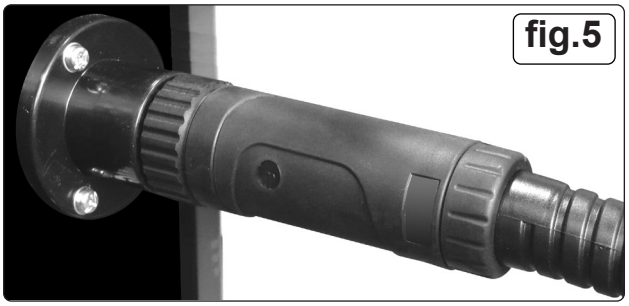
fig.5

6.3. **FITTING A REEL OF WIRE**

6.3.1. Open the wire feed compartment cover and unscrew and remove the star knob, spring and retaining disc (fig.6) and place to one side.

6.3.2. Slide the wire reel onto the reel holder (fig.7).

6.3.3. Reattach the star knob, spring and retaining disc and fully tighten (fig.7).

× **DO NOT** over tighten.

6.3.4. Ensure that the wire is spooling off from the bottom of the wire reel in the direction of the wire drive unit (fig.7).

NOTE: The larger 5kg wire reel can also be fitted.

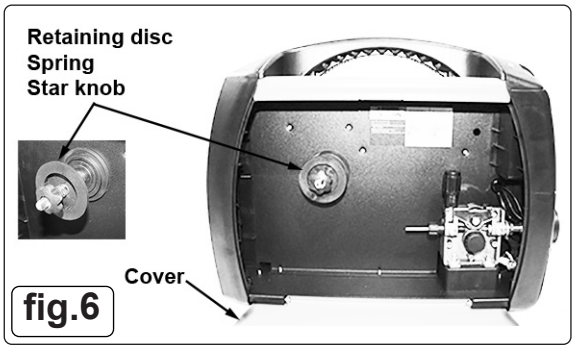

fig.6

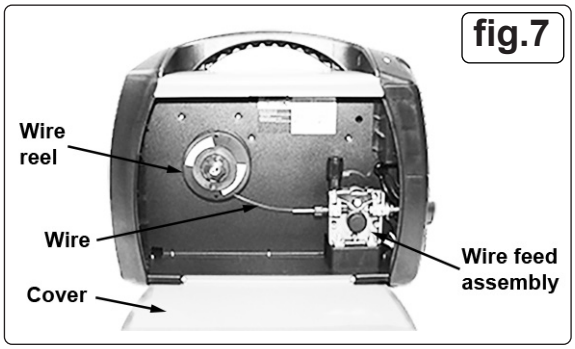

fig.7

6.4. FEEDING THE WIRE THROUGH THE TORCH

❑ **WARNING!** Ensure that the wire feed roller, the wire guide hose and the contact tip of the torch correspond to the diameter and type of wire to be used and are fitted correctly.

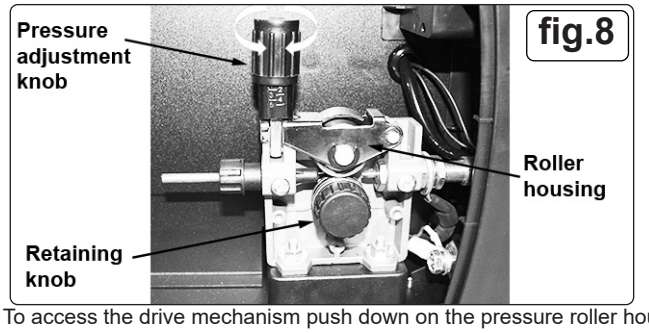

fig.8

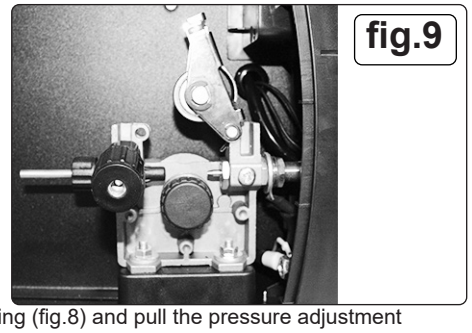
fig.9

6.4.1. To access the drive mechanism push down on the pressure roller housing (fig.8) and pull the pressure adjustment knob towards you and allow to it to rotate downwards (fig.9). Release the pressure roller housing allowing it to rotate up towards the right.

6.4.2. Ensure that the required feed groove (Ø0.8mm and Ø1.0mm wire) is in line with the wire path. See section 4.6 on how to reverse or change the roller.

6.4.3. Release the wire from the reel and trim off any bent portion and remove any burrs

❑ **WARNING!** Prevent the wire from uncoiling by keeping the wire under tension at all times.

6.4.4. Straighten 50-100mm of wire and gently push it through the flexible metal sheathed cable (fig.7) over the feed roller groove and then into the torch cable liner.

6.4.5. Push down the pressure roller onto the wire feed roller and hold it down then rotate the pressure knob upwards and into the housing until it snaps into position (fig.8).

6.4.6. Rotate the tension knob to a medium pressure setting between 2 and 3.

NOTE: Turning the knob clockwise increases the pressure and turning anti-clockwise decreases the pressure (fig.8).

❑ **WARNING! DO NOT** turn gas cup anti-clockwise, as this will damage the internal spring.

d) Unscrew copper contact tip (right hand thread) to remove (fig.10).

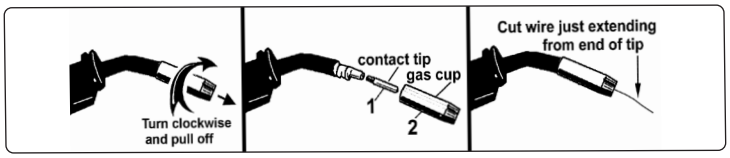

fig.10

6.4.7. Check welder is switched off and that the earth clamp is away from the torch tip. Connect the welder to the mains power supply and select the MIG setting (fig.2) on the mode selector (fig.1.13)

6.4.8. Set the voltage control (fig1.11) to '1'.

6.4.9. Set the wire speed knob (fig1.6) to position 5 or 6. Keep the torch cable as straight as possible and press the torch switch. The wire will feed through the torch.

6.4.10. a) Take torch in left hand, slide the contact tip over the wire and screw back into place.

b) Grasp gas cup in right hand, push onto torch head and turn clockwise only. **DO NOT** turn gas cup anti-clockwise, as this will damage the internal spring.

c) Cut wire so that it is just protruding from the cup.

6.5. SETTING WIRE TENSION. Adjust the wire tension by rotating the wire tension knob. Turn clockwise to increase the tension and anticlockwise decrease the tension. See fig.8.

IMPORTANT: Too little or too much tension will cause wire feed problems and result in poor welding.

6.5.1. Tension between rollers is checked by slowing down the wire between gloved fingers. If top feed roller skids the tension is correct. Use as low a tension as possible; too high a tension could crush the wire and result in a blown fuse.

6.6. TURNING/CHANGING THE DRIVE ROLLER. (See fig.8) Ensure that the wire diameter (0.6/0.8mm) used is matched by the correct groove size in the drive wheel and the correct tip size on the torch as well as the correct torch liner. Failure to do so could cause the wire to slip and/or bind.

6.6.1. Referring to fig.8, open the wire feed mechanism by pushing the locking/wire tension knob down to the right allowing the pressure roller carrier to spring up revealing the feed roller.

6.6.2. Referring to figure 11, remove knob (C) and put to one side.

6.6.3. The roller carrier (A) is keyed to the main drive shaft and the drive roller (B) is keyed to the carrier, see below. Place a finger onto the end of the drive shaft to prevent the carrier moving and slide the drive roller off the carrier with your other hand.

6.6.4. The size of each wire feed groove is printed on the edge of the roller on the same side as the groove.

6.6.5. Turn the roller over to use the other groove or use a roller with different sized grooves as required. The groove to be used should be positioned furthest away from you to be in line with the drive path.

6.6.6. Check that the key in the carrier (A) is seated properly in its slot. Ensure that the slot on the inside face of the drive roller (B) is aligned with the key and slide the roller back onto the carrier.

6.6.7. Screw the black roller retaining knob (C) back on to the end of the drive shaft and

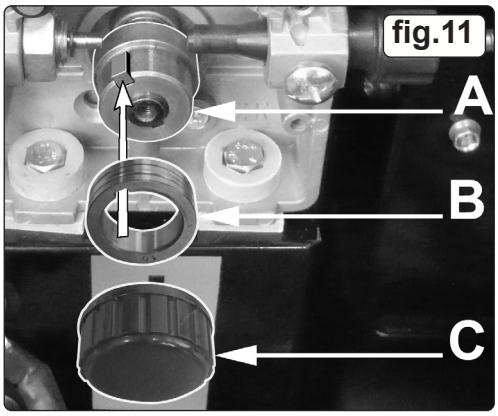

6.7. CONVERTING TO GASLESS WELDING.

6.7.1. To weld without gas (using flux cored wire) the power input lead (fig.1.9) must be connected to the negative (-) terminal and the earthing cable to the positive (+) terminal (fig.13). Ensure that the machine is switched off and unplugged from the mains supply before carrying out this task.

6.7.2. Disconnect the gas safely.

6.7.3. Fit a 1.0mm tip to the torch.

6.7.4. Mount the flux cored wire reel and feed it through to the torch.

6.7.5. Set the mode selector to MIG/MAG (fig.2)

7. MIG/MAG WELDING

A spool of welding wire is positioned on the welder's spool holder and automatically fed through an insulated liner in the torch to the tip. The torch assembly consists of a switch, liner, gas hose, and control cable. The switch activates the wire feed roller and the gas flow. Conversely, releasing the switch stops the wire feed and gas flow. The weld current is transferred to the electrode (the wire) from the contact tip at the end of the torch. A gas cup fits over the contact tip to direct the gas flow towards the weld ensuring that the arc welding process is shielded from oxidising air contaminates. The shielding gas also assists heating of the weld materials. (The welder can also be used in gasless mode using flux cored wire). The torch is connected to the positive side of a DC rectifier, and the negative clamp is attached to the workpiece.

IMPORTANT: Should you have no welding experience, we recommend you seek training from an expert source to ensure your personal health & safety. Good MIG welding may be achieved only with continued, supervised practice.

7.1. PREPARATION FOR WELDING

IMPORTANT: before you commence, make sure the machine is disconnected from the electric supply. If welding a motor vehicle, disconnect the battery or fit an electronic circuit protector. We recommend strongly the use of Sealey "prosaf/12v or 24v" in order to protect sophisticated electronics. Ensure that you have understood the electrical safety instructions in section 1.

7.1.1. Connecting the Power Input Lead. Connect the power input lead (fig 1.9) to the positive (+) socket (fig1.8) and turn to lock.

7.1.2. Connecting the Earth Lead. Connect the earth lead to the negative (-) socket (fig.1.10) and turn to lock. To ensure a complete circuit, the earth lead must be attached securely to the workpiece that is to be welded.

a) Best connection is obtained by grinding clean the point of contact on the workpiece before connecting the earth clamp.

b) The weld area must also be free of paint, rust, grease, etc.

fig.13

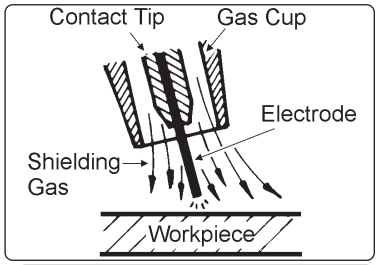

7.1.3. **MODE** Set the mode selector to MIG/MAG (fig.2).

7.1.4. Voltage Control (fig1.11) Set the control to position 1 or 2 for welding up to 2mm thickness. Use settings 3, 4, 5, 6. for thicker welds. The selected voltage is displayed by indicator (fig1.15.).

7.1.5. Setting the Wire Speed Control (fig.1.6). In principle, the lower the power required, the slower the wire speed. See setting chart for voltage and corresponding wire speeds. **NOTE:** these settings are only a guide and will vary according to the operator's experience.

7.1.6. Welding mild steel

To weld mild steel you can use CO_2 gas for most tasks where spatter and the high build up of weld **DO NOT** pose a problem. Welding with a long arc reduces penetration and widens the arc. This in turn results in more spatter. A long welding arc can be appropriate for welding butt joints in thin materials. Welding with a short arc, at the same weld settings, results in greater penetration and a narrower weld and reduces the amount of spatter. To achieve a consistent spatter free and flat weld, you must use an argon/CO_2 mixture.

Wire: 0.6mm Steel

Argon/CO2 Mix

Voltage Step:	1	2	3	4	5	6
Wire Speed:	5	6	7	8	9	10

Settings shown as Guide Only

7.1.7. To weld aluminium use:

- Argon gas,
- 0.8mm Contact Tip (MIG927),
- 0.8mm Aluminium Wire, (MIG/2KAL08).

A clean torch liner is essential, as any contamination of the aluminium wire will produce a poor weld.

7.1.8. Overload Protection. Thermostatic overload protection is provided. When an overload has occurred, the alarm indicator (fig.1.3) will illuminate. Leave the unit to cool; the thermostat will reset the unit automatically when the temperature has returned within limits.

7.1.9. Trigger Mode (see fig.2). Using the trigger mode selector (fig.1.13), the trigger can be set to 2 touch or 4 touch. 2 touch operates the welder for as long as the trigger is kept depressed, whereas 4 touch starts the welder operating when the trigger is depressed but will continue operating when released. The welder will switch off when the trigger is depressed for a second time. The 4 touch setting is useful to reduce user fatigue when a long weld is required. **NOTE:** The trigger mode selector only operates in MIG/MAG mode.

8. MMA/ARC WELDING

8.1. For arc welding the selector switch needs to be in the Arc setting (fig.2.1) and the power input lead disconnected.

❑ **WARNING!** Ensure that the inverter is not plugged into the mains power supply before connecting or disconnecting cables. For electrical installation, see Safety Instructions (Section 1).

❑ **WARNING!** Failure to follow the electrical safety instructions may affect the operating performance and could damage the built-in safety system which, in turn, could result in personal injury or fatality and will invalidate the warranty.

8.2. WELDING CABLE ELECTRODE HOLDER CONNECTION

NOTE: Arc welding cables are not supplied with machine. Sealey part no: INVMMA2 is suitable.
Before connecting cables it is important to refer to the electrode manufacturer's instructions on the electrode packaging which will indicate the correct polarity connection for the electrode, together with the most suitable current to use.

8.3. ARC WELDING

When arc welding the electrode holder is normally connected to the "POSITIVE" (+) terminal (fig.1.8).

8.4. WELDING RETURN CABLE- (WORK CLAMP) CONNECTION

The work clamp cable is connected to the terminal not occupied by the electrode holder cable.
The clamp is connected to the workpiece or a metallic work bench. The connection must be as close to the weld as possible.

❑ **WARNING!** Cable connectors must be turned fully into the sockets to ensure a good electrical contact. Loose connections will cause overheating, rapid deterioration and loss in efficiency. **DO NOT** use welding cables over 10m in length. With the exception of a metallic workbench **DO NOT** connect the return cable to any metallic structure which is not part of the workpiece, as this will jeopardise weld quality and may be dangerous.

9. PREPARATION

9.1. The welding current must be regulated according to the diameter of the electrode in use and the type of joint to be welded (see diameter/current chart to the right).Welding current is controlled by the amperage control (fig.1.6).

9.2. Further consideration must be given to the location of the weld, for example: Welds that are performed on a horizontal surface require a higher voltage than those performed on a vertical or overhead surface.

9.3. The mechanical character of the weld will be determined not only by the current used, but also by the diameter and quality of the electrode, the length of the arc and the speed and position of the user. The condition of the electrode is an important factor and it must never be wet or damp.

9.4. Ensure that the workpiece is correctly secured before operating the inverter.

Electrode Diameter (mm)	Welding Current (Amps) Min	Max
1.6	25	50
2	40	80
2.5	60	110
3.2	80	160
4	120	200

For Guidance Only

10. TIG WELDING

10.1. The mode selector should be set to the TIG position (fig.2).
NOTE: The INVMIG200 is not supplied with TIG leads. Sealey part no: INVTIG2 is suitable. If INVTIG2 is used, the braided gas hose should be connected to the gas bottle: the gas flow is controlled by the valve on the gun (the gas flow is continuous once the valve is open).

10.2. TIG CONNECTIONS

TIG TORCH CABLE. Connect the torch cable to the negative socket (-) on the front panel (fig.1.10). **WORK CLAMP CABLE.** Connect the clamp cable to the positive socket (+) on front panel (fig.1.8). Please note that the way the welding cables are connected to the inverter for ordinary MMA welding may be different from the way the cables are connected for standard TIG welding. Whilst most stick electrodes are connected to the positive terminal certain types need to be connected to the negative terminal. It is therefore essential that the user refers to the manufacturer's instructions for the electrodes to ensure the correct polarity is selected.

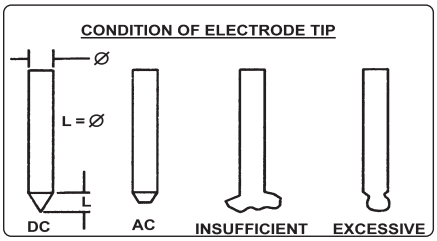

10.3. PREPARATION AND CHOICE OF ELECTRODE: In order to produce a good weld it is important to choose an electrode of the correct diameter for the current to be used. For a general guide to the settings to be used with particular diameters of electrodes please refer to the tables below. The electrode will normally protrude from the ceramic nozzle by 2 to 3mm but in order to gain access to inaccessible areas such as internal corners the electrode can be made to protrude by up to 8mm. The chosen electrode should be sharpened axially on a grinding wheel as indicated in the diagram to the right. The tip should be perfectly concentric in order to avoid arc deviations. The condition of the electrode should be regularly inspected to maintain it in peak condition.

10.4. PREPARATION OF THE WORKPIECE. For a good weld it is important that the workpiece is cleaned thoroughly so that no oxides, oil, grease or solvents remain on the surface of the material.

10.5. TIG WELDING PARAMETERS.

TIG WELDING PARAMETERS FOR STAINLESS STEEL.

Thickness (mm)	Current (A)	Electrode (diam mm)	Nozzle (diam mm)	Argon (L/min)	Filler Rod (diam mm)
0.5 - 0.8	15 - 30	1	6.5	3	---
1	30 - 60	1	6.5	3 - 4	1
1.5	70 -100	1.6	9.5	3 - 4	1.5
2	90 - 110	1.6	9.5	4	1.5 - 2.0
2.5	110 - 130	1.6	9.5	5	1.5 - 2.0
3	120 - 150	1.6 - 2.4	9.5	5 - 6	2 - 3

TIG WELDING PARAMETERS FOR DEOXIDISED COPPER.

Thickness (mm)	Current (A)	Electrode (diam mm)	Nozzle (diam mm)	Argon (L/min)	Filler Rod (diam mm)
0.5 - 0.8	20 - 30	1	6.5	4	---
1	80 - 100	1.6	9.5	6	1.5
1.5	110 - 140	1.6	9.5	6	1.5

11. RATING PLATE

On the front panel of the welder is the ratings plate, giving the following data:

1 - The BS/EU standard relating to the safety and construction of arc welding and associated equipment.
2 - Single phase transformer.
3 - Symbol indicates welding with a continuous flow of welding wire.
4 - Symbol for Single-phase AC supply.
5 - Rating of internal protection provided by casing.
6 - Output U_0 Rated minimum and maximum no load voltage.
I_2, U_2 Current and corresponding voltage.
X Welding ratio based on a 10 minute cycle.
20% indicates 2 minutes welding and 8 minutes rest,
100% would indicate continuous welding.
7 - Mains Supply
U_1 Rated supply voltage and frequency.
I_1max Maximum current.
I_1eff Maximum effective current.
8 - Welding current range.
9 - Serial Number. Specifically identifies each welder.

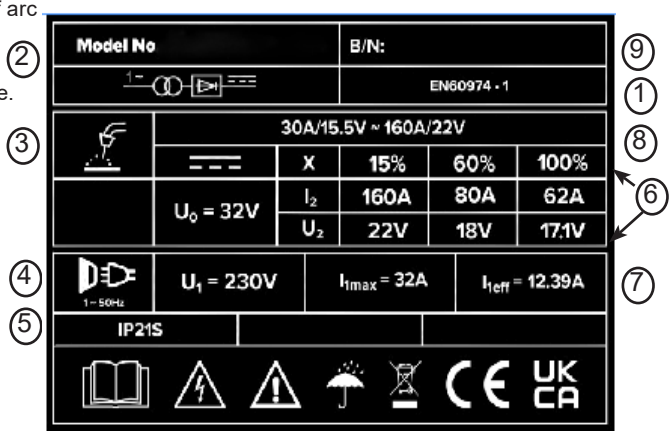

For Illustration Only

12. DUTY CYCLE

When the machine reaches the end of its duty cycle and overheats, the thermostatic switch opens to allow the internal components to cool. This is denoted by the alarm indicator (fig.1.3.) illuminating. Allow the machine to cool and resume use when the light goes out.

13. MAINTENANCE

NOTE: The equipment should be routinely maintained according to these instructions. All access and service covers should be closed and properly fastened when the welding equipment is in operation. The welding equipment should not be modified in any way except for those changes and adjustments covered in these instructions. In particular, the spark gaps of any arc striking and stabilising devices should be adjusted and maintained according to the instructions.

13.1. **WIRE FEED UNIT** Check the wire feed unit at regular intervals. The feed roller wire guide plays an important part in obtaining consistent results. Poor wire feed affects welding. Clean the rollers weekly, especially the feed roller groove, removing all dust deposits.

13.2. **TORCH** Protect the torch cable assembly from mechanical wear. Clean the liner from the machine forwards by using compressed air. If the liner is clogged it must be replaced.

13.2.1. **CHANGING FEED ROLLER** (See Section 4.6.)

13.3. **CONTACT TIP** The contact tip is a consumable item and must be replaced when the hole becomes enlarged or oval. The contact tip **MUST** be kept free from spatter to ensure an unimpeded flow of gas. Refer to fig.9 for removal and replacement.

13.4. **GAS CUP** The gas cup must also be kept clean and free from spatter. Build up of spatter inside the gas cup can cause a short circuit at the contact tip which will result in either the fuse blowing on the printed circuit card, or expensive machine repairs. To keep the contact tip free from spatter, we recommend the use of Sealey anti-spatter spray (MIG/722308) available from your Sealey stockist.

13.5. **REPLACING THE LINER** Wind the wire back on to the spool and secure it. Unscrew the torch from the machine and undo the brass nut. The liner should now be visible. Pull it out and replace with a new one.

13.6. Remove the casing periodically and, with a low pressure air flow (max 1bar or 15psi), remove dust from inside the machine.

13.7. **DO NOT** direct compressed air onto the electronic circuit boards, these should be cleaned with a very soft brush.

13.8. Ensure that all electrical connections are tight and check the wiring for damage to the insulation.

13.9. Ensure that the casing is correctly replaced and secured before attempting to use the inverter.

13.10. Keep the outside of the machine clean by wiping with a soft, dry cloth.

13.11. For any other service or maintenance, contact your local Sealey stockist.

14. TROUBLESHOOTING

PROBLEM	POSSIBLE CAUSE	REMEDY
1. Power source stops	Overheating protection activated due to overload	Protection automatically resets when transformer has cooled (about 15 min)
2. No weld current	Rectifier blown	Replace rectifier.
3. No weld current	Bad connection between clamp & workpiece	Clean or grind contact surface and weld area
	Break in earth lead	Repair or replace earth lead.
	Break in torch lead	Repair or replace torch
4. Feed motor not working, lamp is on	Gear damaged or worn	Replace gears. (Contact service agent)
	Motor defective	Replace motor (Contact service agent)
	PCB fault	Replace PCB
5. Wire does not feed, feed roller rotates	Pressure roller improperly adjusted	Adjust tension.
	Dirt, copper, dust, etc, has collected in torch liner	Clean the liner from the machine forward. Use compressed air. If too much dirt, replace the liner.
	Gas cup (Nozzle) or tip defective	Replace gas cup (nozzle) and/or tip. (Section 4)
	Deformed wire	Check roller tension and adjust it if necessary (Section 4.5)

6. Wire feeds unevenly	Dirt, etc, in liner	Clean the liner from the machine forward. Use compressed air
	Gas cup (Nozzle) or Tip defective	Replace gas cup (nozzle) and/or tip. (Section 4).
	Gas cup (Nozzle) spattered	Clean or replace gas cup (nozzle) (Section 4)
	Feed roller groove clogged	Clean feed roller.
	Feed roller groove deformed	Replace feed roller.
	Pressure roller tension improper	Adjust tension. (Section 4.5)
7. Unstable arc	Incorrect settings	Check settings.
	Impurities in weld area	Clean and/or grind workpiece.
	Worn or defective gas cup (nozzle)	Replace gas cup (nozzle). (Section 4)
8. Porous weld	No gas	Open gas cylinder, regulate gas flow
	Gas cup clogged	Clean or replace cup. (nozzle) (Section 4)
	Draft blowing away shielding gas	Screen off welding site or increase gas flow
	Rusty or dirty joints	Clean and/or grind workpiece.
	Torch too far from or at wrong angle to work	The distance from gas cup to workpiece should be 8 to 10mm
	Gas leak	Check hoses, connections and torch assembly. Press the gas cup into correct position
	Faulty Electrovalve	Clean out or replace
9. Electrode sticking in gas cup (nozzle)	Worn or defective gas cup (nozzle)	Replace gas cup (nozzle). (Section 4)
	Electrode deformed	Check roller tension. (Section 4.5)
	Wire speed too slow	See recommendations for wire speed
10. Irregular weld head	Torch incorrectly held	Use correct torch angle
	Wire weaving in weld pool	Check roller tension and adjust as needed. (Section 4.5)
11. Weld bead too narrow and raised	Weld current too low	Increase power and wire speed.
	Weld speed too high	Move torch slower and weave a little more
12. Weld bead too wide	Weld current too high	Decrease power and wire speed.
	Weld speed too low	Move torch faster and weave less
	Arc too long	Bring torch closer to workpiece
13. Poor penetration	Weld current too low	Increase power and wire speed.
	Arc too long	Bring torch closer to workpiece
14. Excessive penetration	Weld current too high	Decrease power and wire speed.
	Weld speed too slow	Move torch faster
	incorrect distance of torch to workpiece	Torch distance should be 8-10mm

ENVIRONMENT PROTECTION

Recycle unwanted materials instead of disposing of them as waste. All tools, accessories and packaging should be sorted, taken to a recycling centre and disposed of in a manner which is compatible with the environment. When the product becomes completely unserviceable and requires disposal, drain any fluids (if applicable) into approved containers and dispose of the product and fluids according to local regulations.

REGISTER YOUR PURCHASE HERE

WEEE REGULATIONS

Dispose of this product at the end of its working life in compliance with the EU Directive on Waste Electrical and Electronic Equipment (WEEE). When the product is no longer required, it must be disposed of in an environmentally protective way. Contact your local solid waste authority for recycling information.

Note: It is our policy to continually improve products and as such we reserve the right to alter data, specifications and component parts without prior notice. Please note that other versions of this product are available. If you require documentation for alternative versions, please email or call our technical team on technical@sealey.co.uk or 01284 757505.
Important: No Liability is accepted for incorrect use of this product.
Warranty: Guarantee is 36 months from purchase date, proof of which is required for any claim.

Sealey Group, Kempson Way, Suffolk Business Park, Bury St Edmunds, Suffolk. IP32 7AR
01284 757500 **sales@sealey.co.uk** **www.sealey.co.uk**

© Jack Sealey Limited